EASY

LIGHT OAK

MATT WHITE

79 | 40
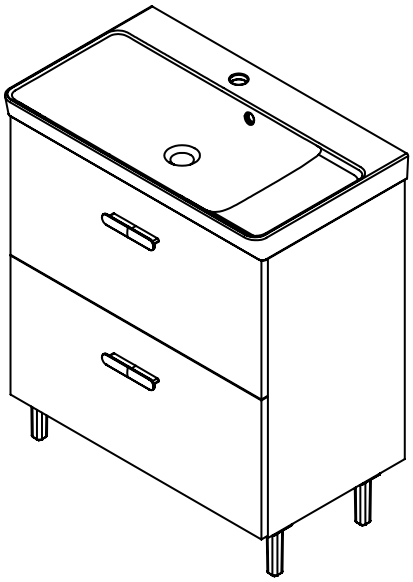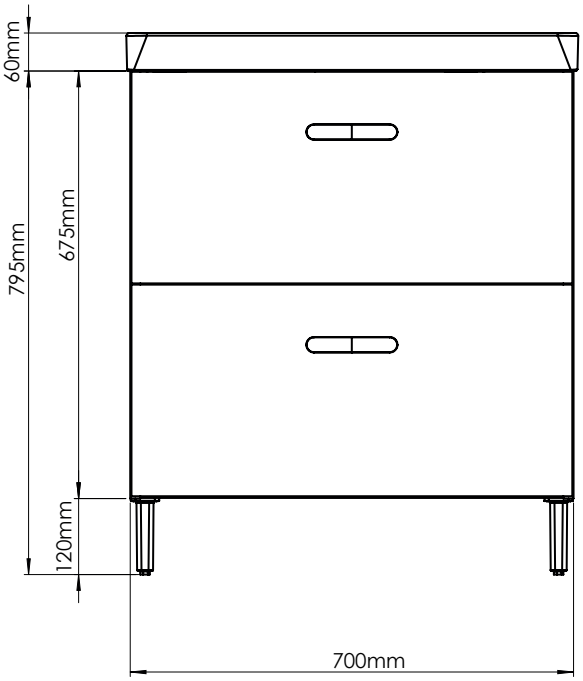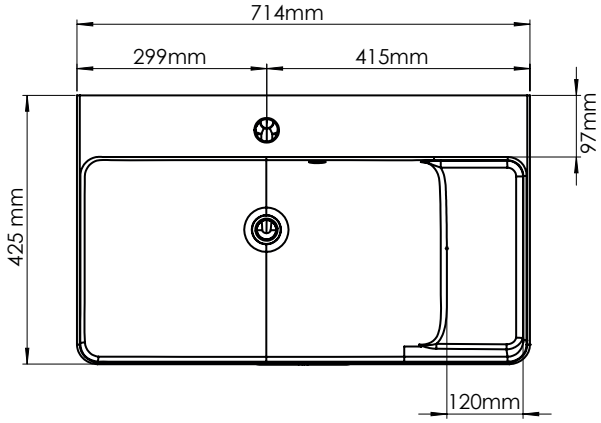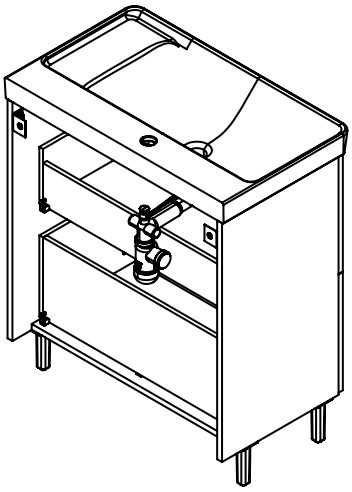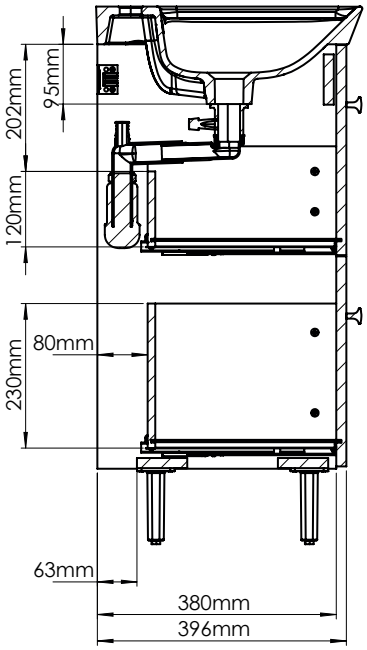
70